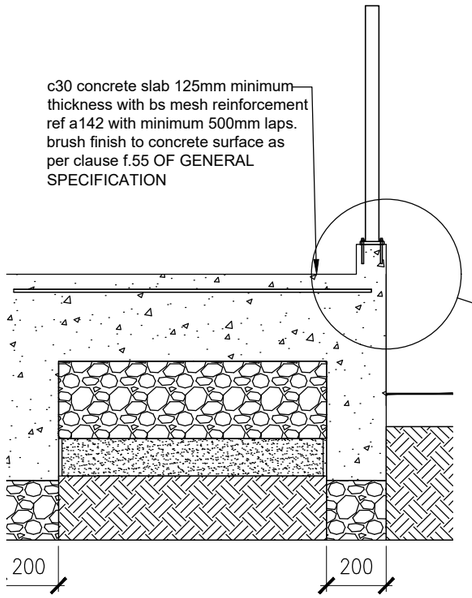

TYPICAL RAMP SECTION
Scale 1:20

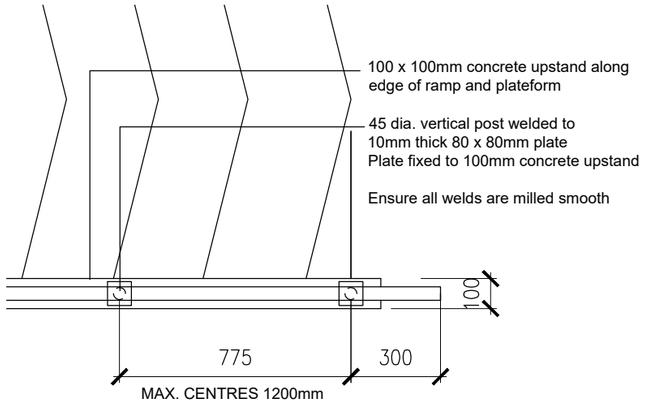

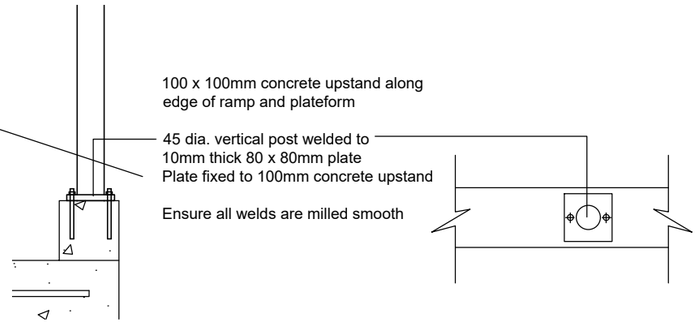

TYPICAL HANDRAIL FIXING DETAILS
Scale 1:10

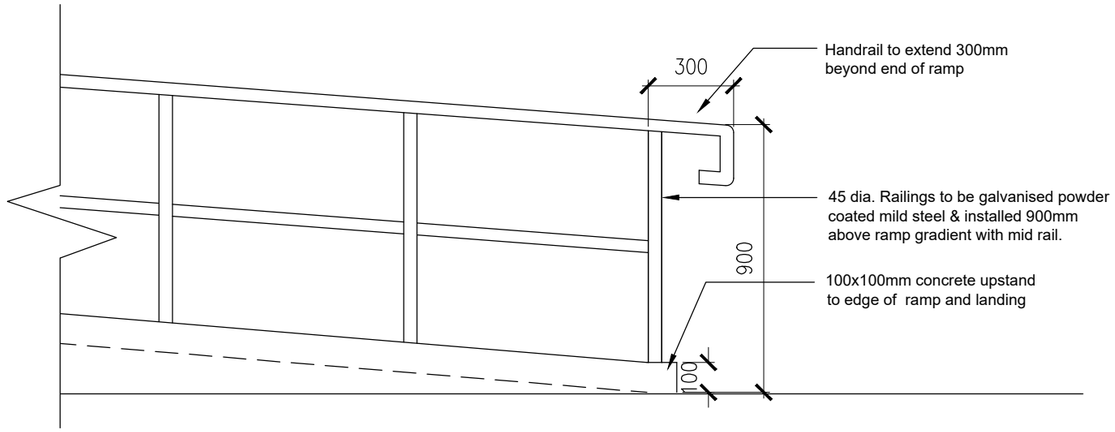

TYPICAL HANDRAIL DETAILS
Scale 1:20

Notes:

- All works to be carried out in accordance with Building Regulations and Codes of Practices
- All dimensions and levels to be checked out site prior to works commencing
- Ramp Gradient Optimal 1:20 and Maximum 1:12
- Turning Circle Optimal 1800mm and Minimum 1500mm
- Ensure all existing drainage and services are maintained
- Existing AJs or GTs to be raised using appropriate risers if located mid flight or on landing area.
- Care to be taken during construction with regard to existing Gas Meter box
- Ensure all finishes are made good

Tenant Contact Details:

Name:
Contact number:

Comhairle Contae Fhine Gall
Fingal County Council
ARCHITECTS DEPARTMENT
FINGAL COUNTY HALL, MAIN ST., SWORDS, Co. DUBLIN
Tel: (01)890 5050, Fax:- (01) 890 5079
COUNTY ARCHITECT:
FIONNUALA MAY Dip.Arch., B.Arch. Sc., M.U.B.C., M.R.I.A.I.

No.	DATE	REVISION

SCALE:- Varies @ A3	PROJECT TITLE: Response & General Maintenance West & South County	DRAWING. NO:	REV.
DATE:- November 2025	DRAWING TITLE: Typical Ramp Details	26-002-T7004	
DRAWN:- C. Campion	SENIOR ARCHITECT: / PROJECT TECHNICIAN: E. Larkin		